BALL SCREW JACKS

5 TON - 1 1/2" SCREW STANDARD

WB 65 / WB 125 / WB 245

Upright

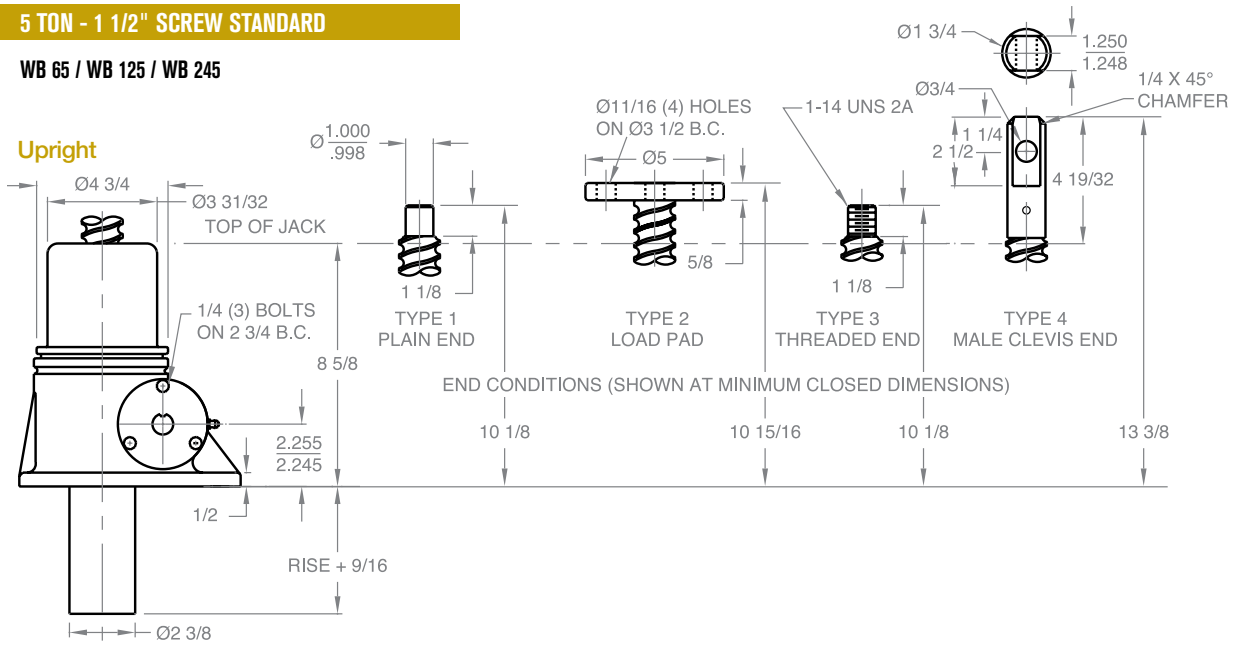

Upright traveling nut

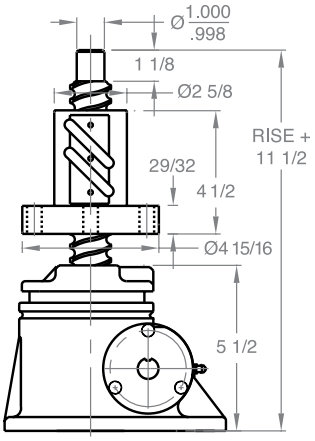

Typical Plan View

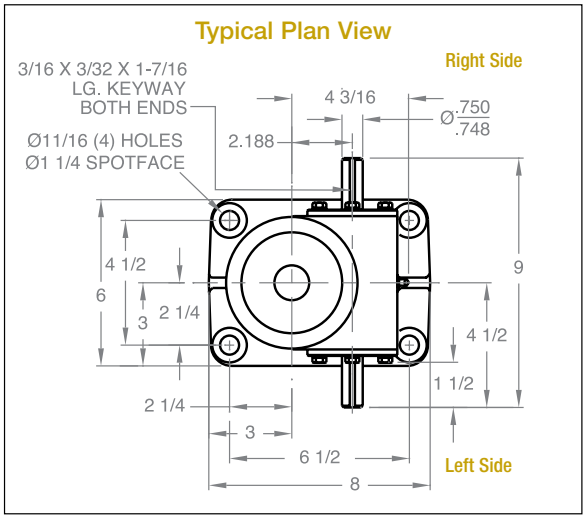

Inverted traveling nut

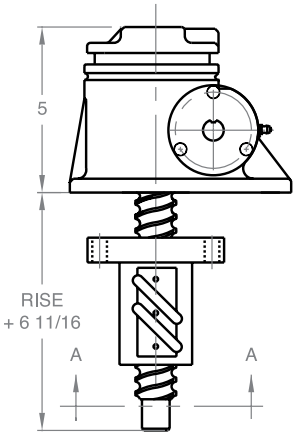

Inverted

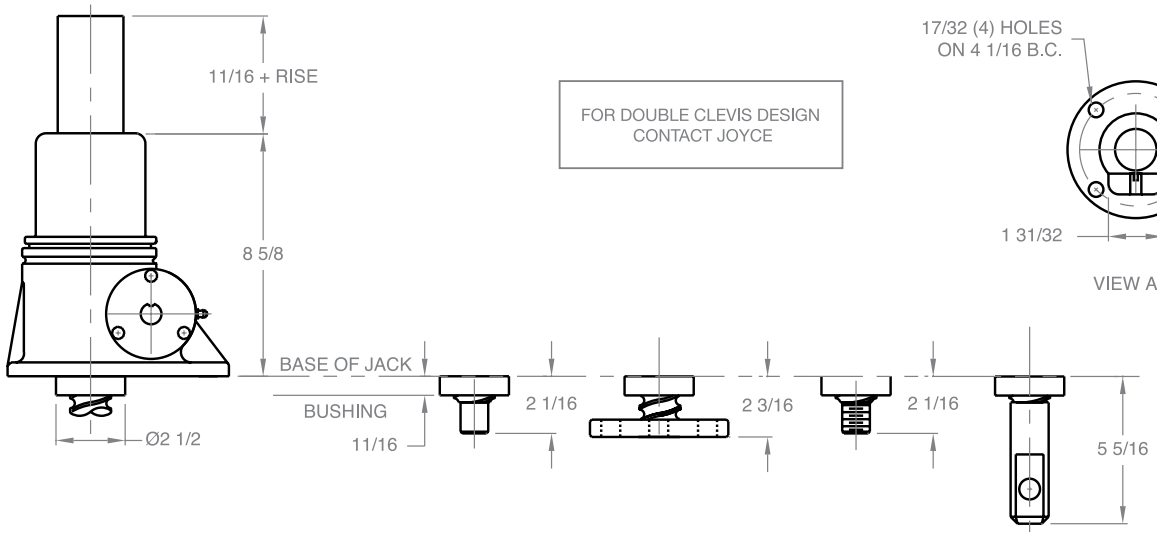

FOR DOUBLE CLEVIS DESIGN
CONTACT JOYCE

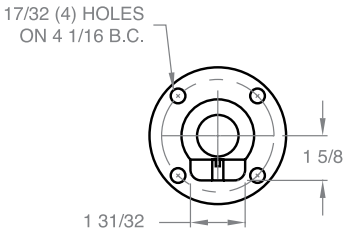

VIEW A-A

Note: Drawings are artist's conception — not for certification; dimensions are subject to change without notice.